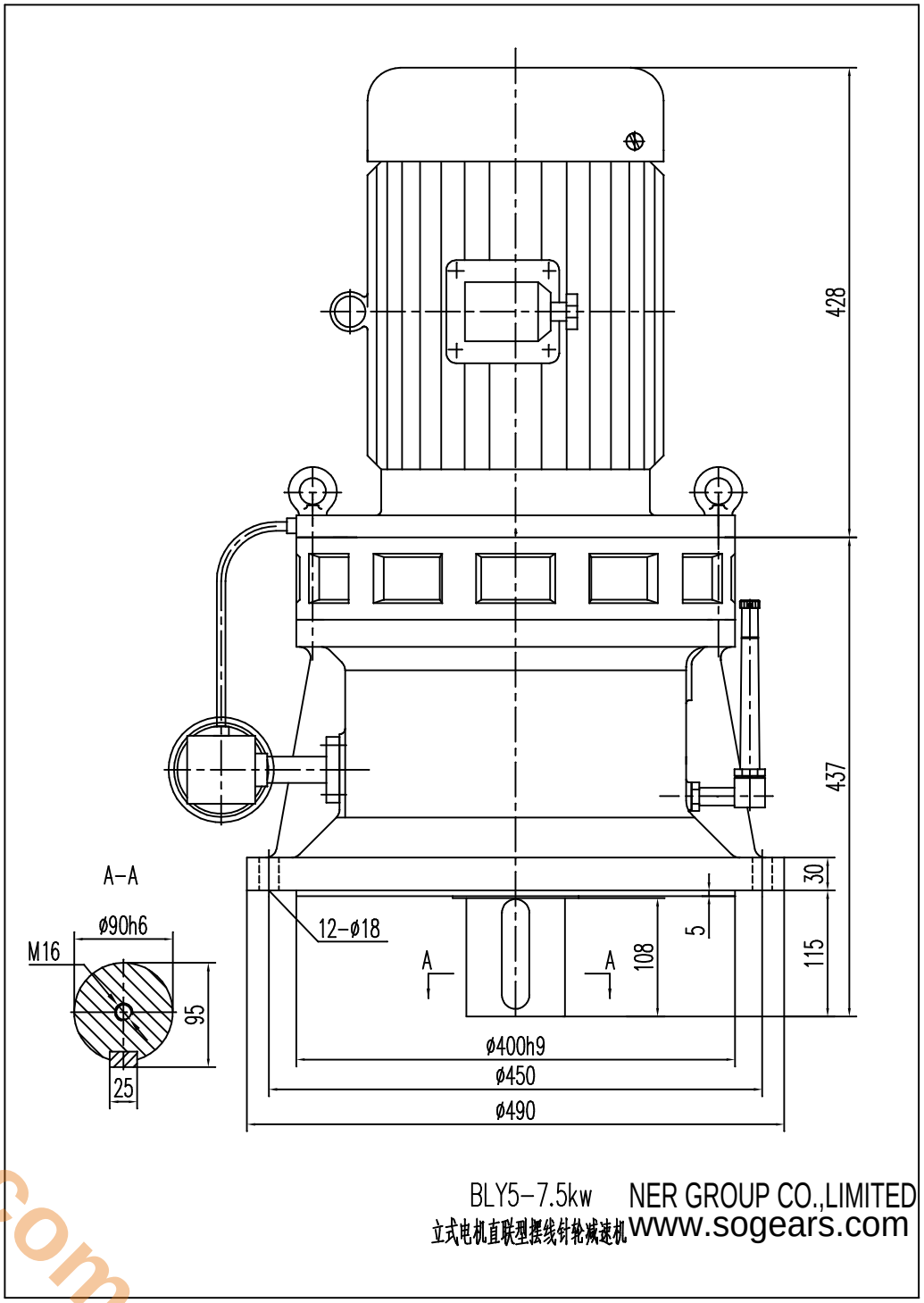

BLY5-7.5kw NER GROUP CO.,LIMITED

立式电机直联型摆线针轮减速机 www.sogears.com

info@sogears.com