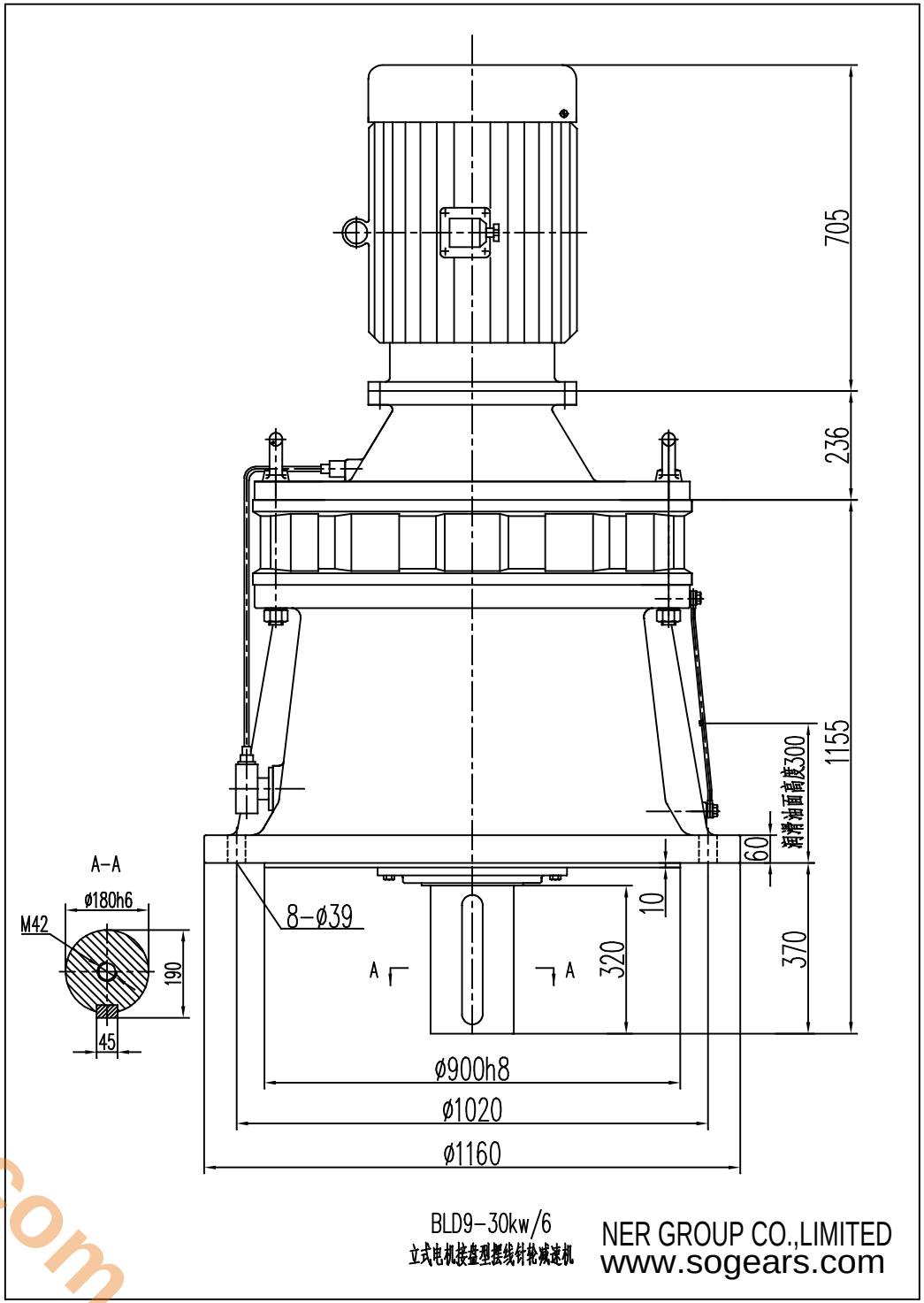

BLD9-30kw/6
立式电机接盘型摆线针轮减速机

NER GROUP CO.,LIMITED
www.sogears.com

info@sogears.com