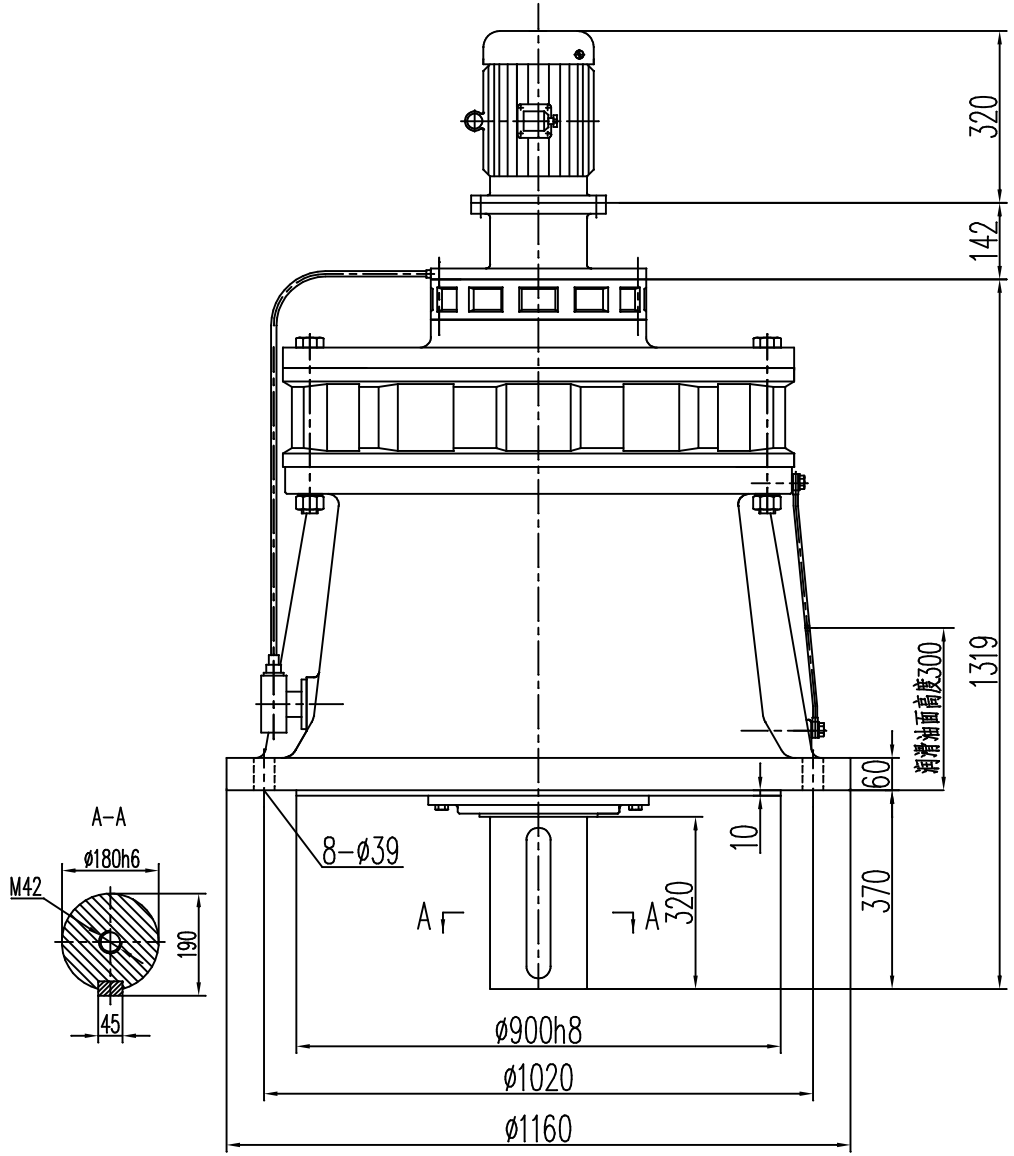

BLED95-2.2kw
立式双级电机接盘型摆线针轮减速机

NER GROUP CO.,LIMITED
www.sogears.com

info@sogears.com