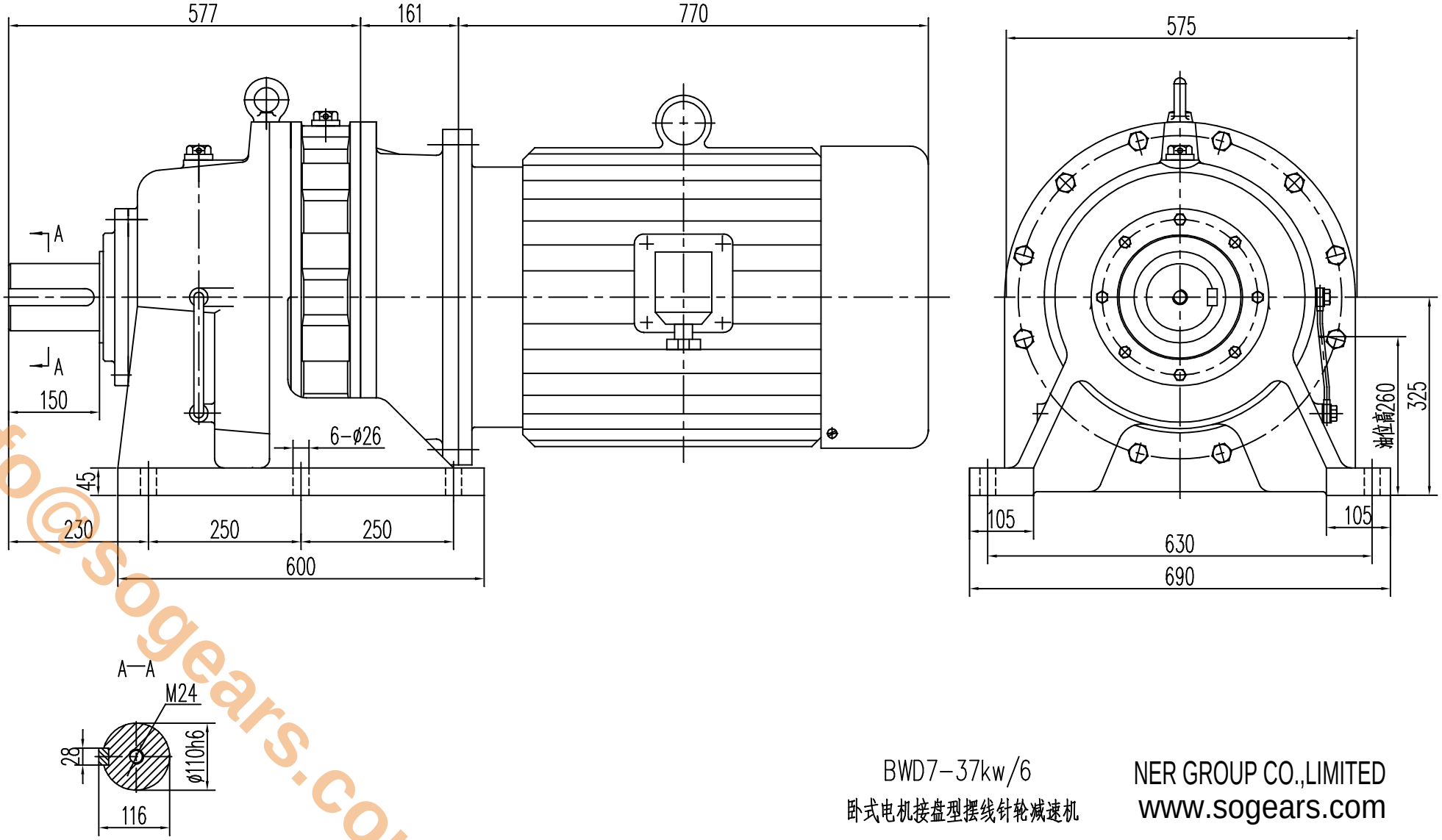

BWD7-37kw/6

卧式电机接盘型摆线针轮减速机

NER GROUP CO.,LIMITED

www.sogears.com

info@sogears.com