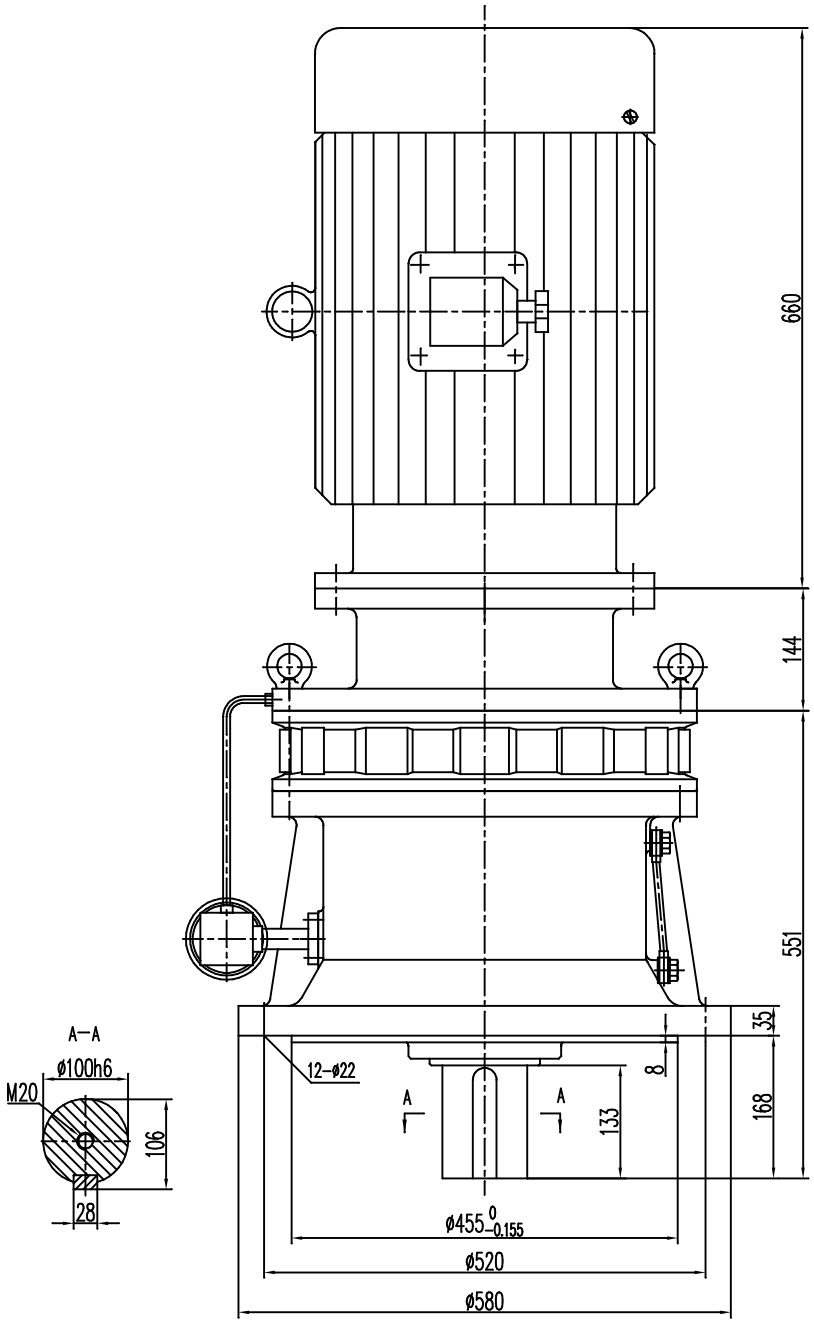

XLD9-18.5~22kw/6
立式电机接盘理论减速机

NER GROUP CO.,LIMITED
www.sogears.com

info@sogears.com